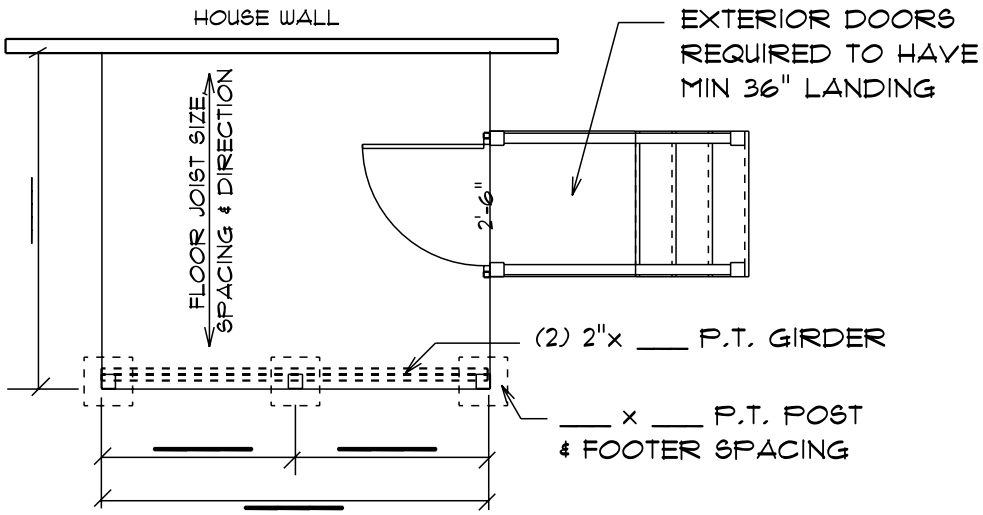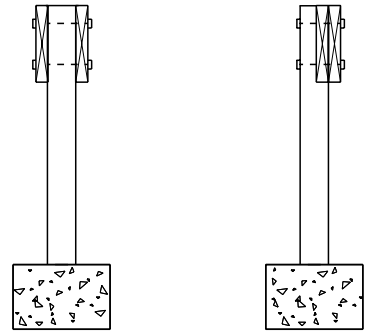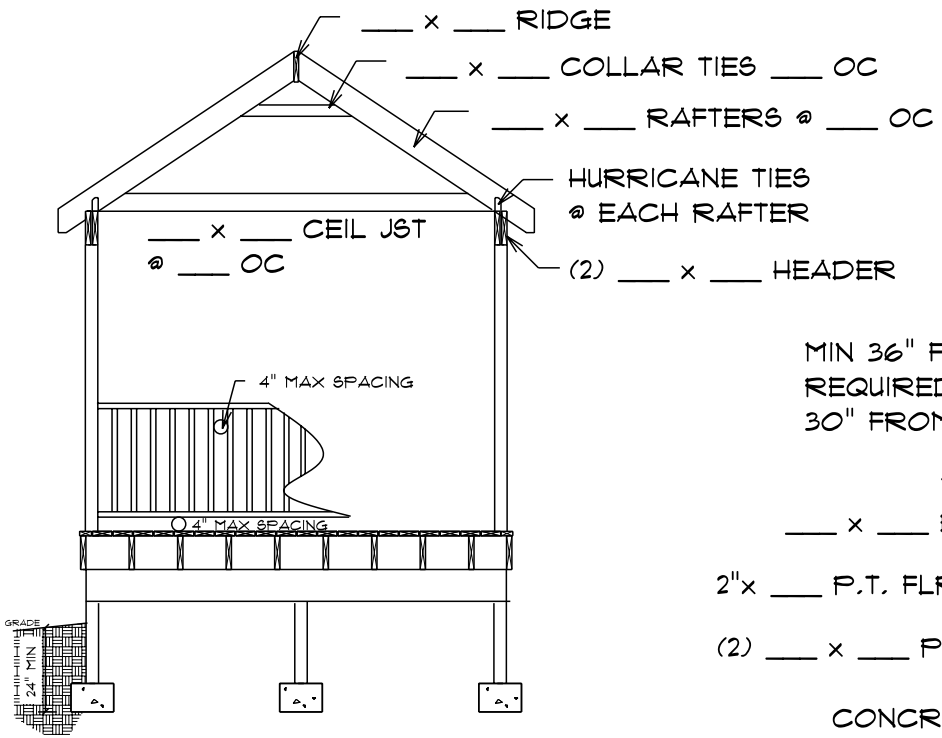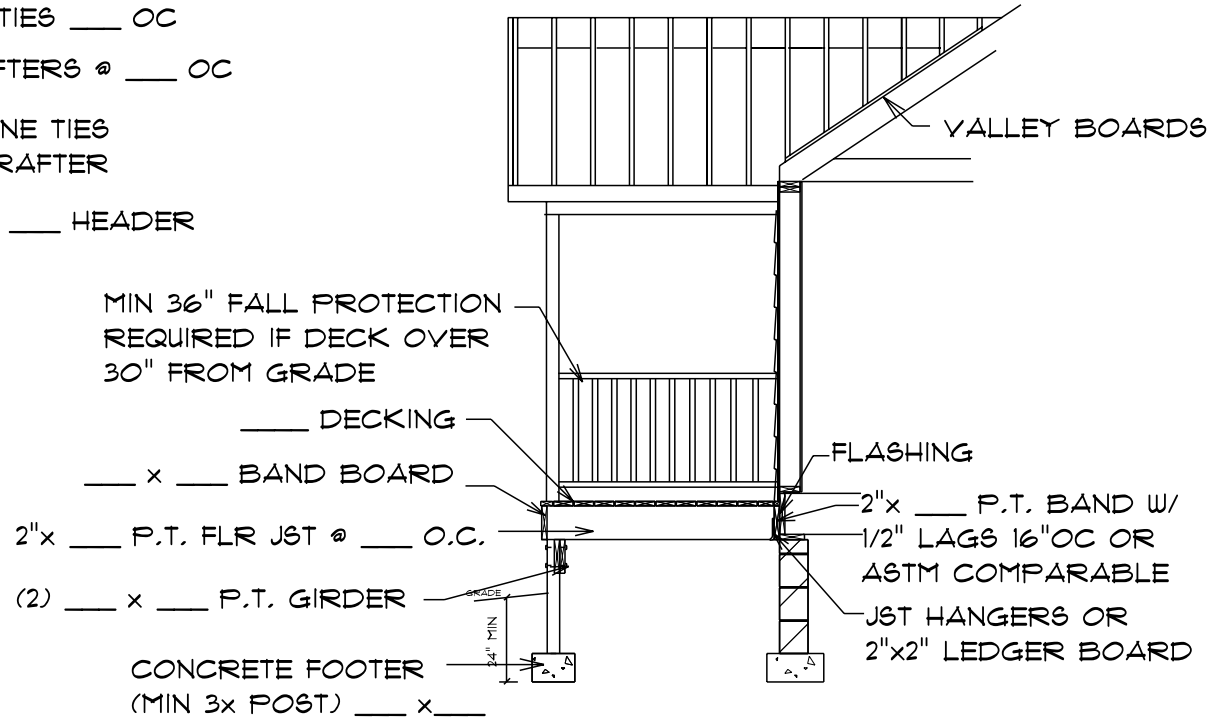# SUSSEX COUNTY PORCH PLAN REQUIRMENTS