SUSSEX COUNTY RESIDENTIAL
RAMP REQUIRMENTS

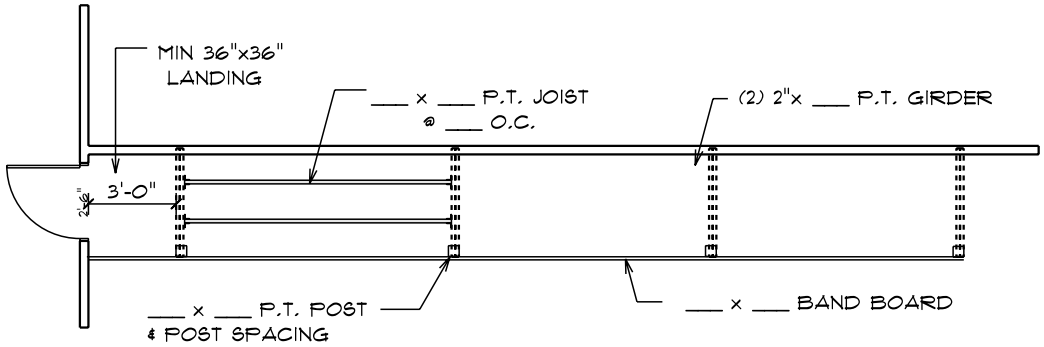

RAMP

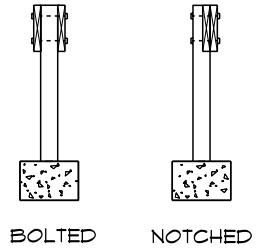

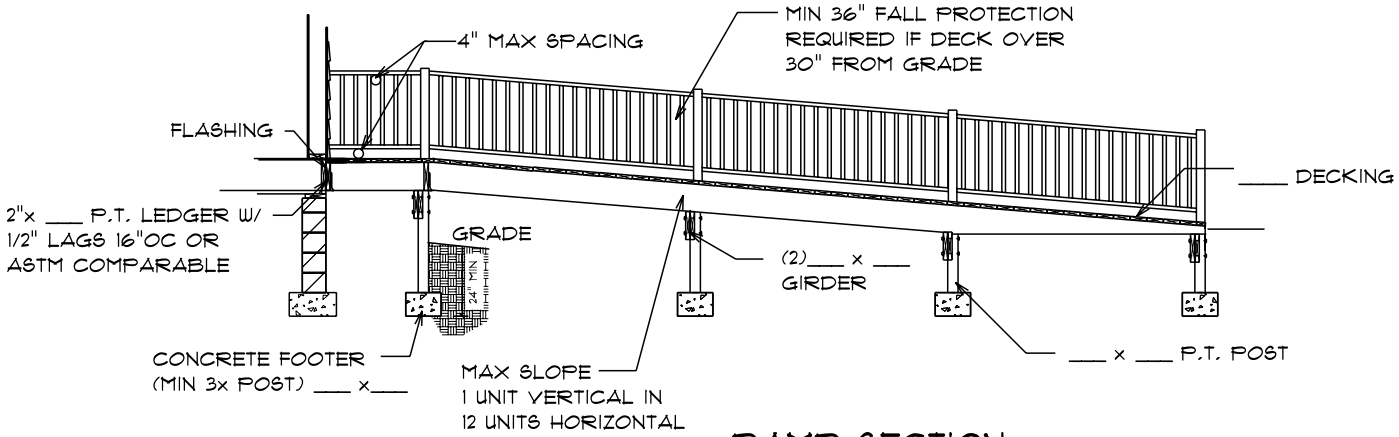

RAMP SECTION

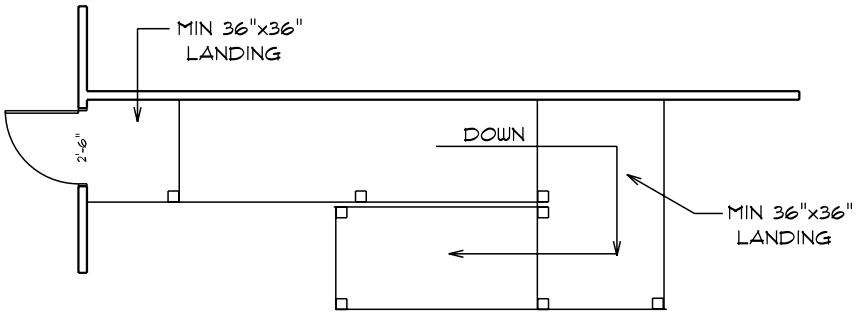

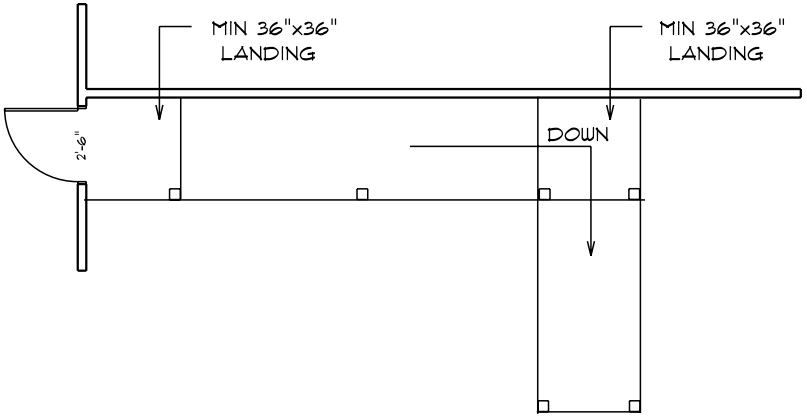

OTHER RAMP DESIGNS